Notes:

1. Maximum Electric Current: 18A
2. Maximum Electric Rating: 105°C 600 Volts Max
3. Insulation Material: Nylon
4. Insulation Color: Black
5. Terminal Material: Copper
6. Wire Range: 16 AWG (1.50mm^2)

Standard (Metric)

L1: 0.63 (16.0mm)
L2: 0.39 (10.0mm)
D: 0.08 (2.0mm)
D1: 0.07 (1.7m)
D2: 0.14 (3.5mm)

Tolerances

(Unless Otherwise Specified)

CATEGORY	Insulated Wire Ferrule	SCALE	4/1
PART #	AD15010	SHEET	1-1
MATERIAL	Tin-Plated Copper	PAGE	
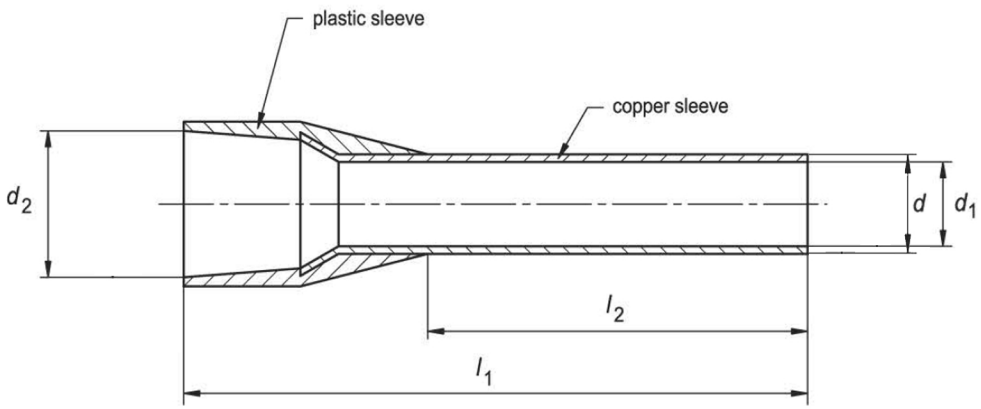
FerrulesDirect