Notes:

1. Maximum Electric Current: 125A
2. Maximum Electric Rating: 105°C 600 Volts Max
3. Insulation Material: Nylon
4. Insulation Color: Yellow
5. Terminal Material: Copper
6. Wire Range: 4 AWG (25.00mm^2)

Standard (Metric)

L1: 1.10 (28.0mm)
L2: 0.63 (16.0mm)
D: 0.30 (7.7mm)
D1: 0.29 (7.3mm)
D2: 0.44 (11.2mm)

Tolerances

(Unless Otherwise Specified)

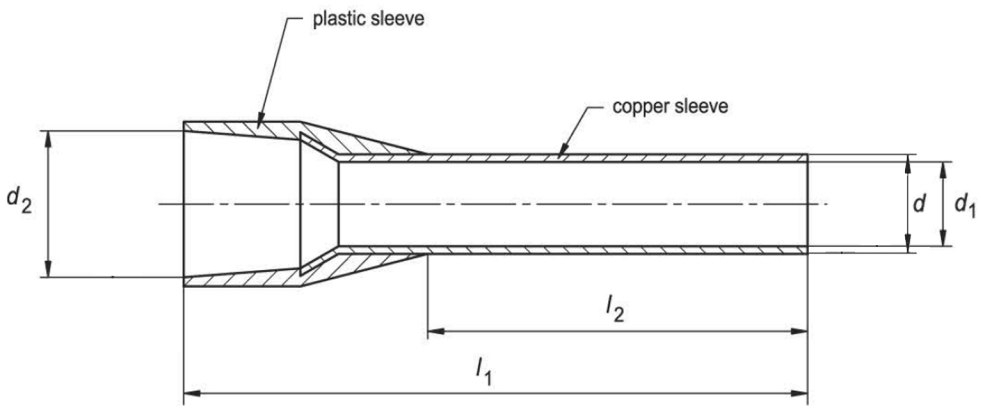

CATEGORY	Insulated Wire Ferrule	SCALE	4/1
PART #	AD250016	SHEET	1-1
MATERIAL	Tin-Plated Copper	PAGE	

FerrulesDirect