Notes:

1. Maximum Electric Current: 30A
2. Maximum Electric Rating: 105°C 600 Volts Max
3. Insulation Material: Nylon
4. Insulation Color: Gray
5. Terminal Material: Copper
6. Wire Range: 14 AWG (2.50mm^2)

Standard (Metric)

L1: 0.51 (13.0mm)
L2: 0.24 (6.0mm)
D: 0.10 (2.5mm)
D1: 0.09 (2.2mm)
D2: 0.17 (4.2mm)

Tolerances

(Unless Otherwise Specified)

CATEGORY	Insulated Wire Ferrule	SCALE	4/1
PART #	AT25006	SHEET	1-1
MATERIAL	Tin-Plated Copper	PAGE	
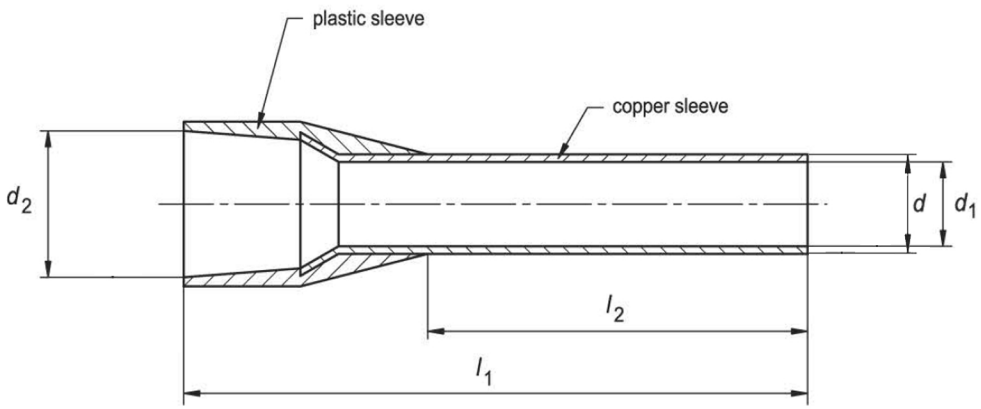
FerrulesDirect