Notes:

1. Maximum Electric Current: 195A
2. Maximum Electric Rating: 105°C 600 Volts Max
3. Insulation Material: Nylon
4. Insulation Color: Olive Green
5. Terminal Material: Copper
6. Wire Range: True 1 AWG (42.4mm²)

Standard (Metric)

L1: 1.42 (36.0mm)
L2: 0.79 (20.0mm)
D: 0.36 (9.2mm)
D1: 0.32 (8.2mm)
D2: 0.49 (12.5mm)

Tolerances

(Unless Otherwise Specified)

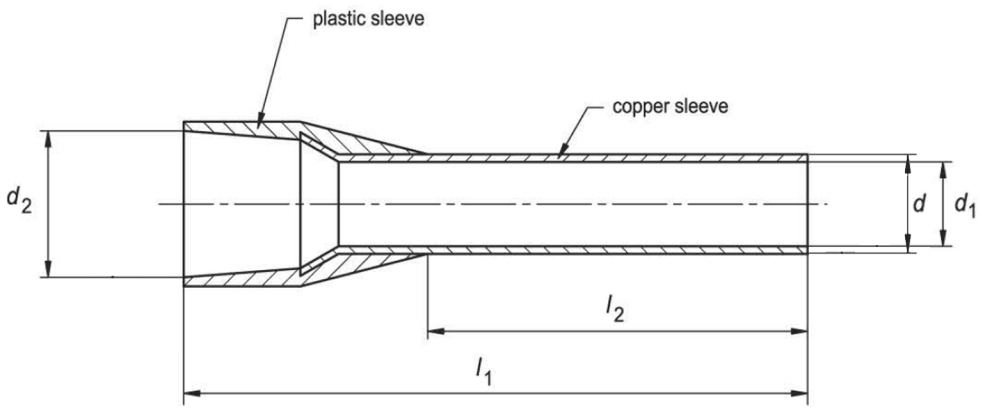

CATEGORY	Insulated Wire Ferrule	SCALE	4/1
PART #	AW420020	SHEET	1-1
MATERIAL	Tin-Plated Copper	PAGE	

FerrulesDirect