## Notes:

1. Maximum Electric Current: 50A
2. Maximum Electric Rating: 105°C 600 Volts Max
3. Insulation Material: Nylon
4. Insulation Color: Black
5. Terminal Material: Copper
6. Wire Range: 10 AWG (6.00mm$^2$)

## Standard (Metric)

L1: 0.68 (17.3mm)
L2: 0.35 (9.0mm)
D: 0.15 (3.9mm)
D1: 0.14 (3.5mm)
D2: 0.25 (6.3mm)

## Tolerances

(Unless Otherwise Specified)

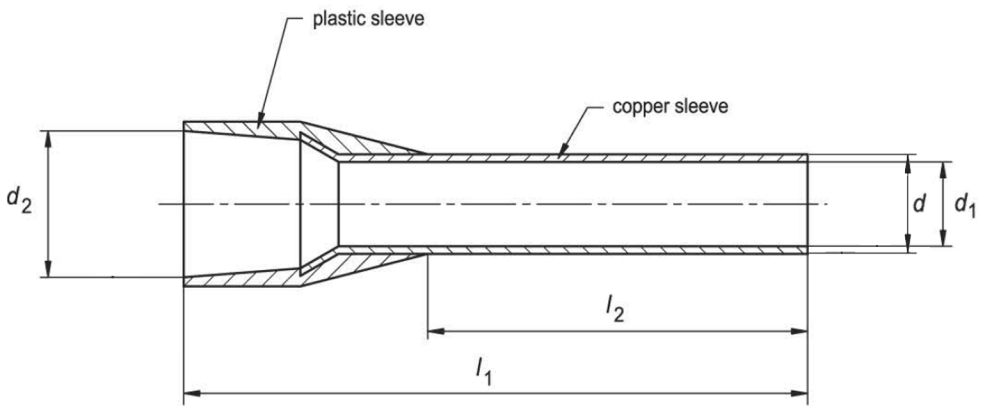


| | | | |
|---|---|---|---|
| CATEGORY | Insulated Wire Ferrule | SCALE | 4/1 |
| PART # | AW60009 | SHEET | 1-1 |
| MATERIAL | Tin-Plated Copper | PAGE | |

FerrulesDirect